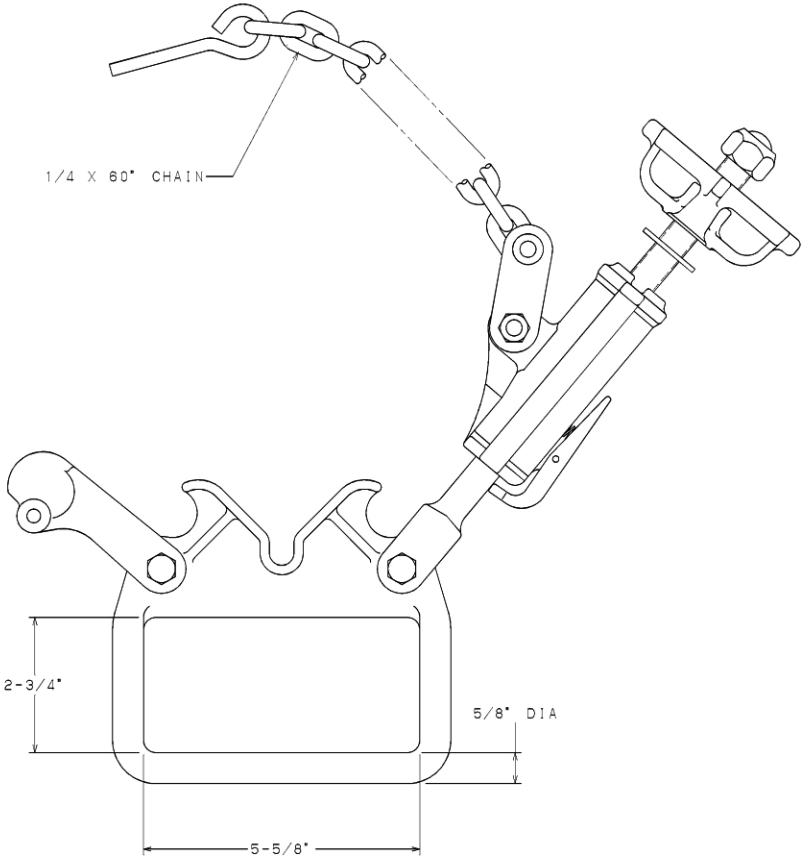

CAT. NO. T600-1549

PG&E CODE NO. 20-5877, GROUP F & L

LATEST EC NO:	REV.	DATE	CHANGED BY	RESP ENGINEER
92113001	-	--------	---	KING

DO NOT SCALE THIS DWG

THIRD ANGLE PROJECTION

ISO DUAL DIMENSIONS IN=INCH, MM=MILLIMETER

DRN BY: SC

DATE: 11-24-92

TITLE: GROUND CLUSTER BAR

SIZE: C

HUBBELL POWER SYSTEMS ® CHANCE ®

CAE CAD CAM DWG NO: SA600-1549

CONFIDENTIAL: THIS DRAWING AND ITS CONTENTS ARE CONFIDENTIAL AND THE EXCLUSIVE PROPERTY OF HUBBELL / A.B. CHANCE COMPANY. NO PUBLICATION, DISTRIBUTION OR COPIES MAY BE MADE WITHOUT WRITTEN CONSENT BY HUBBELL / A.B. CHANCE COMPANY.
©2000 HUBBELL/A.B. CHANCE. UNPUBLISHED - ALL RIGHTS RESERVED UNDER THE COPYRIGHT LAWS