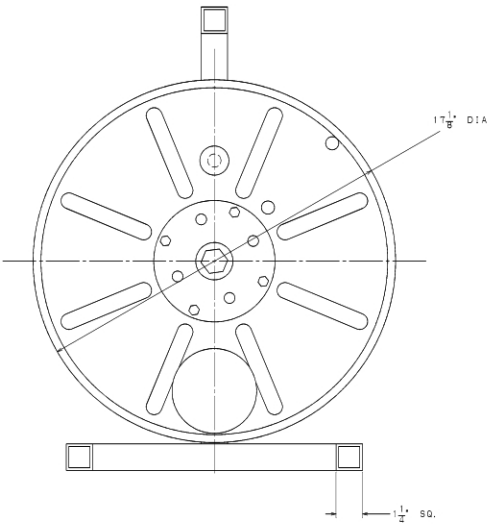

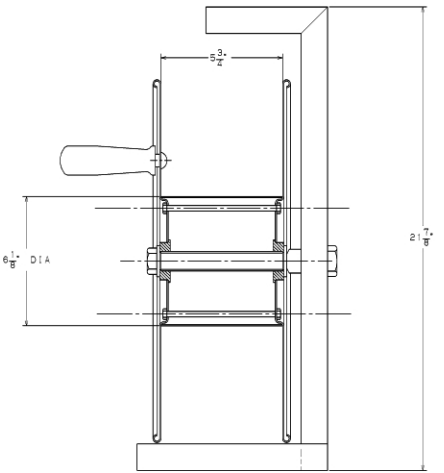

CAT. NO. C417-6086

LATEST ECI NO:	REV:	DATE	CHANGED BY	REQD ENGINEER
93056506	-	--------	---	HARMON

DR. DR. NOTE TOLE DVD

THIRD ANGLE PROJECTION

(93) DUAL STRESS/DIA IN=INCH, MM=MILLIMETER

DWN BY: | DATE

QUALLS | 09-19-93

TITLE: STORAGE REEL ASS' Y

SIZE: D

BUFFALO TOOLS

CHANCE®

CAD CAM

DWG NO: SA417-6086

CONFIDENTIAL INFO. DRAWING AND ITS CONTENTS ARE CONFIDENTIAL AND THE EXCLUSIVE PROPERTY OF HUBBELL, INC. & CHANCE COMPANY. NO PART MAY BE REPRODUCED OR COPIED WITHOUT WRITTEN CONSENT BY HUBBELL, INC. & CHANCE COMPANY.
© 2006 HUBBELL, INC. & CHANCE COMPANY - ALL RIGHTS RESERVED - HUBBELL, INC. & CHANCE COMPANY